Expert: Wiring

Introduction

The wiring tool in ***Expert*** automatically creates the shortest wire connecting two points specified by the user. The created wire goes around any existing layout objects. It may lie in multiple layers (multi-wire) if the source and target points are on different layers or if the wire is shorter than the alternative single-layer wire case.

Point to Point Routing

The simplest scenario of using the wiring tool is when the user just defines the source and destination points in some particular layer. The tool uses the Lee algorithm to find the shortest path around all obstacles. Width and styles for the new wire are initially taken from the layout technology but can easily be redefined.

Users may wish the resulting wire to come through some particular areas. In this case ***Expert*** allows defining additional intermediate points. In this case the resulting path will include these points. Users can also bound routing by some particular area. In this case the tool will not consider possible routes outside of this area.

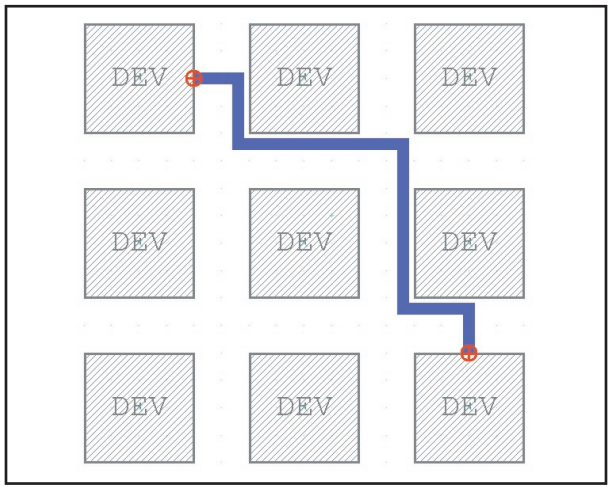

Figure 1.

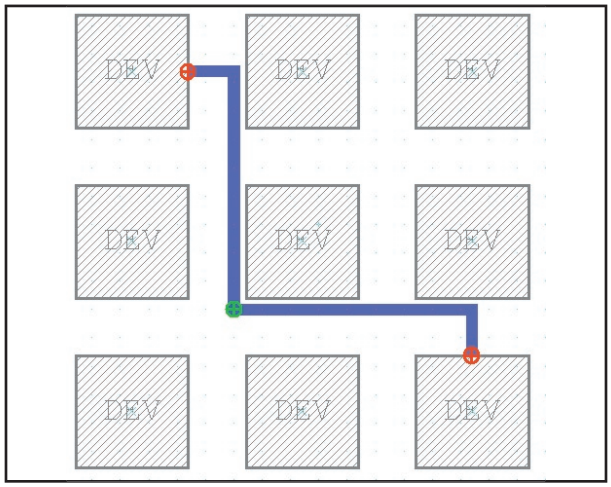

Figure 2.

If the technology file has contact definitions then ***Expert*** may perform wiring on multiple layers. The resulting path may be much shorter than the path on single layer because it can lie not only around obstacles but also above or below them.

In the case of multi-layer routing users have additional options to affect the resulting path: one might define source, destination and intermediate points on different layers, might define different width and styles for wires in different layers, or might fine-tune all options to get just the path the user needs.

Routing Area

The tool finds a route in some particular routing area. This area can be calculated automatically or can be user defined. In either case it is better for the tool performance if the routing area is small. In automatic mode the tool first tries to find the route in the minimal possible area. If such attempts fail it expands the area as necessary and tries again. If the user wants to expand the area in any particular direction or restrict it to some rectangle, it is possible to define custom routing area and the tool will not consider possible routes outside of this area.

Contacts

In order to be able to perform wiring in multiple layers the tool needs contacts to be defined in the technology file. ***Expert*** allows regular or parametric cells as contacts. Such cells could be in the current project or in external library.

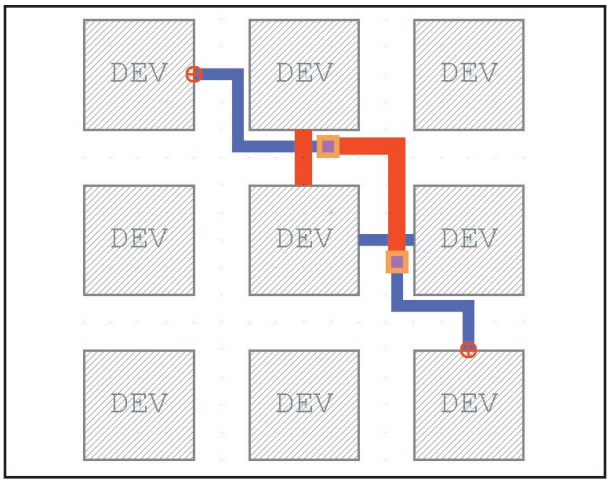

Figure 3.