MOSVAR

PSP-BASED MOS VARACTOR MODEL

MOS Varactor Compact SPICE Model

MOSVAR is a compact SPICE model for MOS varactor devices derived from the PSP analytical surface potential charge formulation. The frequency dependence of the surface potential is included by introducing a time constant in the inversion charge calculation. Parasitic components affecting the device reactance are physically modeled. With its consistent formulation, MOSVAR accurately describes the varactor capacitance characteristics,, which is crucial for frequency tuning circuits in RF and analog design.

MOSVAR is selected by the CMC (Compact Model Council) as the standard model for MOS varactor devices.

Features

- Surface potential-based description
- Physically scalable
- Dynamic inversion
- Finite polysilicon doping
- Quantum mechanical corrections
- Overlap region
- Gate tunneling currents
- Fringing capacitances
- Extrinsic resistance effects
- Temperature effects
- Thermal noise

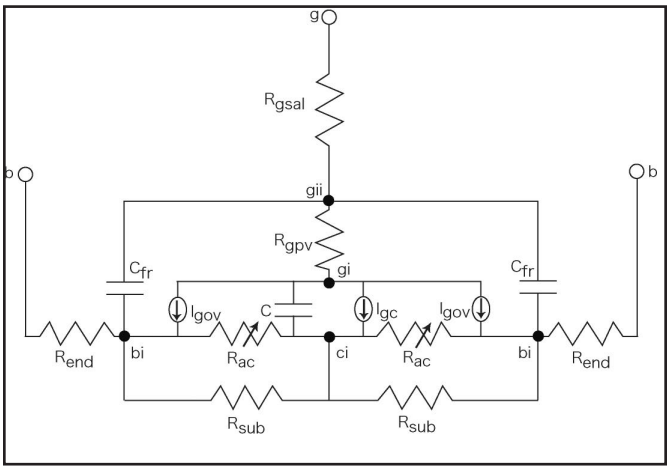

Equivalent circuit of the MOSVAR model.

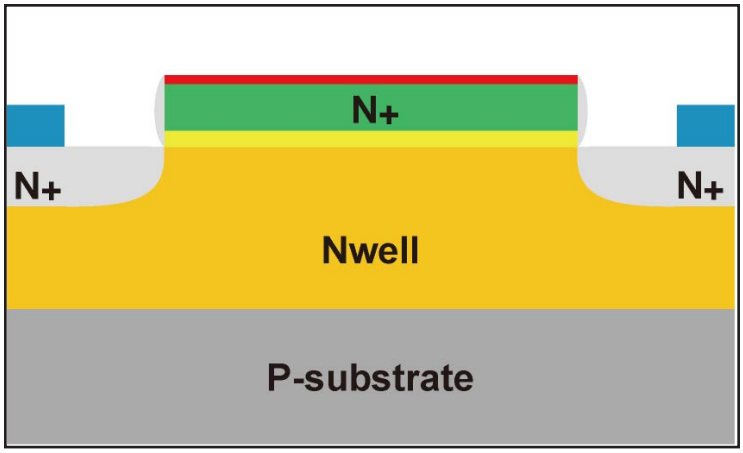

MOS varactor device cross-section.

Silvaco Implementation

- MOSVAR is implemented as a member of ModelLib independent compact SPICE model library. It can be accessed within SmartSpice as LEVEL=1004
- Internal warnings and diagnostic provide valuable information to help find convergence issues
- Linked to advanced convergence algorithms available in SmartSpice
- MOSVAR is compatible with parallel architecture algorithms

MOSVAR Model Instantiation

Syntax

```
Cxxx g bi b <modelName> <instanceParameters>
.model <modelName> mosvar <modelParamaters>
```

Example

```
C1   g  bi b mv1 w = 10u l = 0.3u
Cmv  x  y  z mv2 w = 10u l = 0.5u

.model mv1 mosvar
+ LEVEL = 1004 TOXO = 3n NSUBO = 1e23
+ QMC = 1 TAU = 1e-10
```

SILVACO

Benefits From Using MOSVAR

- MOSVAR satisfies all the model requirements needed for a MOS varactor device model. With its consistent surface potential formulation, MOSVAR is proven to be accurate in calculating MOS varactor capacitance and quality factor characteristics over a wide range of voltages and frequencies
- MOSVAR is developed as a global, scalable model. With a single parameter set, it can describe device electrical characteristics for different device geometries. The model parameters are close to real process which enables parameter extraction fast and straightforward

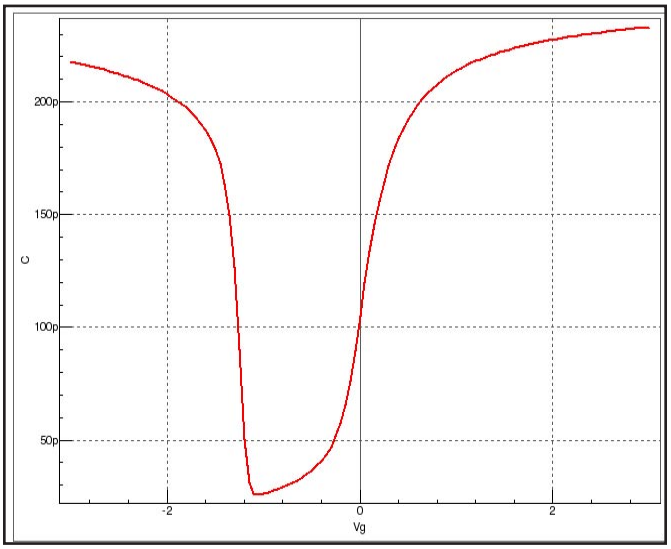

Capacitance characteristics at low frequency.

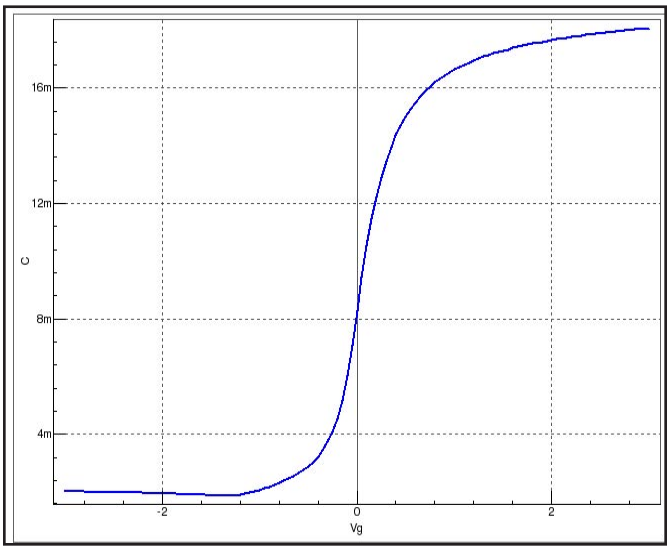

Capacitance characteristics at high frequency.

References

1. *PSP-Based MOSVAR v1.0.0 Manual*, http://pspmodel.asu.edu/
2. G. Gildenblat, et al., "*PSP: An advanced surface-potential-based MOSFET model for circuit simulation*," IEEE Trans. Electron Devices, Vol. 53, No. 9, 2006.
3. J. Victory, et al., "*A physically-based, scalable MOS varactor model and extraction methodology for RF applications*," IEEE Trans. Electron Devices, Vol. 52, No. 7, 2005.
4. J. Victory, et al., "*PSP-Based Scalable MOS Varactor Model*," Proc. IEEE Custom Integrated Circuits Conference, 2007.

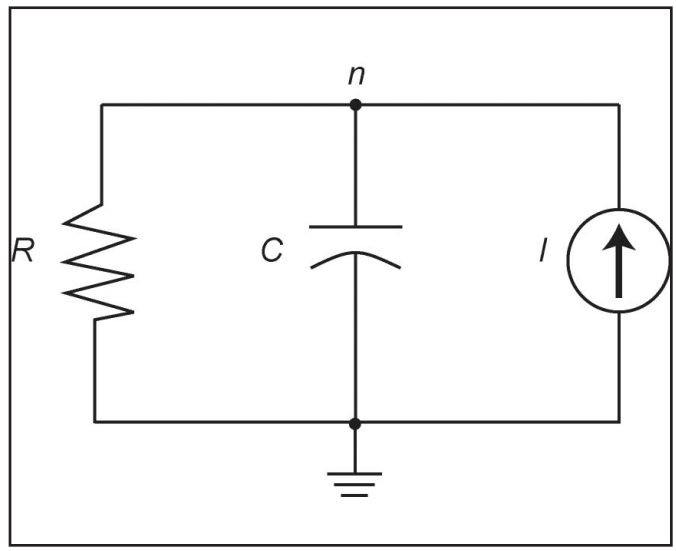

Equivalent circuit used in modeling the inversion charge to include frequency-dependence of capacitance.

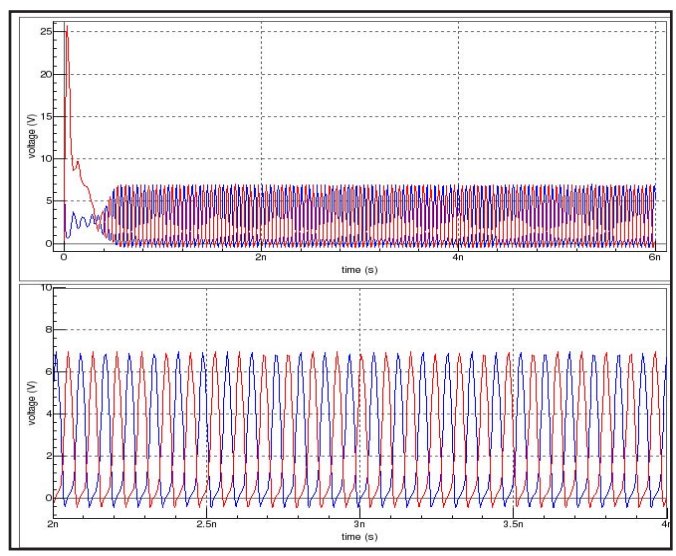

SmartSpice simulation results of a VCO circuit showing the out-of-phase nodes.